Buyer: PRL
Season : PF 26
Fit: Classic - New

Technical Sheet - Pre run

Order No: PRLS/25- 12731, 12730,12728

Style:710B18632
CL BD PPC SPT
Washing: Softener wash

Special Instructions : SPI -18, Button stitch cross - 8X8.

Modified On:18th-Dec-2025

Modified By : John

Sample date: 19-12-2025
Board # 710B18632-SC19-CLBDPPCS
Factory : LAGUNA CLOTHING
Type of Sample : PP Sample
Fit Model : Mannequin
Color : 6671I POWER PURPLE-/WHITE -002
Sealer no.: VPP LC 000003

Fit comments:
-All measurements within tolerance

Workmanship comments
- Observed slightly roping at bottom hem. FTY has too need to correct it.
- Observed bulginess at front placket on 1st button to Collar area. Factory has to correct it.
- Front length is +1/2". Factory have to maintain within tolerance.

All trims actual except wash-care and QR label.
Non Fusible interlining used at Collar, cuff, neckband, and front placket.

Buyer: PRL
Season : PF 26
Fit: Classic - New

Technical Sheet - Pre run

Order No:PRLS/25- 12731, 12730,12728

Style:710B18632
CL BD PPC SPT
Washing: Softener wash

Special Instructions : SPI -18, Button stitch cross - 8X8.

Modified On:18th-Dec-2025

Modified By : John

ROUND CUFF

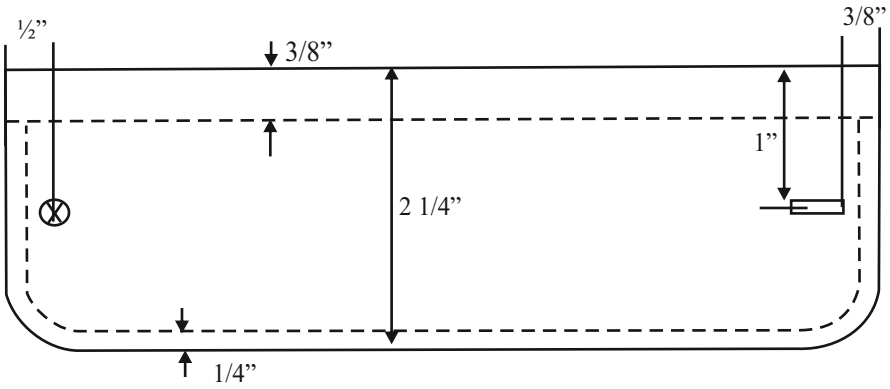

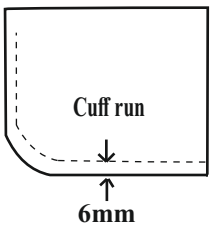

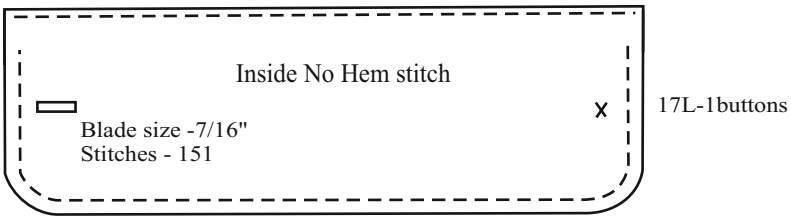

SLEEVE PLACKET

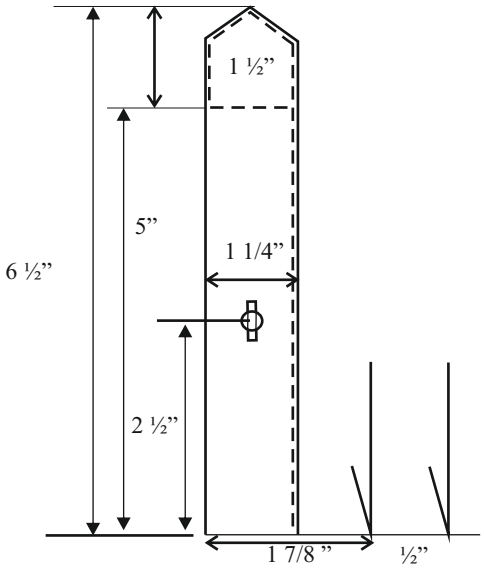

Sleeve Pleat Depth— 1/2”

Blade size -3/8"
Stitches - 129

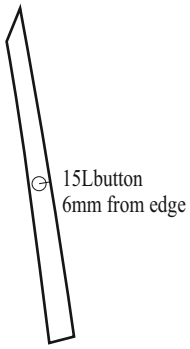

Small slv plkt width-1/2"

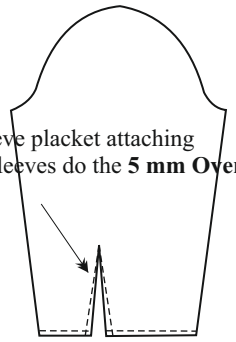

* Before Sleeve placket attaching both side Sleeves do the **5 mm Over lock**

* Before cuff attaching both side Sleeves do the **8 mm Over lock**

Interlining
Collar Skin- T60
Cuff - S64
Neck Band - P37
Front Placket- T88MS

Button(**)**
Front : 6, 17L
N Band : 1, 17L
Cuff : 1+1, 17L
Slv Plkt : 1+1, 15L
Spare : 1-17L, 1-15L,1- 13L @ Side seam
Collar points:1+1,13L

Thread details

Button shanking S/B 2mm

Buyer: PRL
Season : PF 26
Fit: Classic - New

Technical Sheet - Pre run

Order No: PRLS/25- 12731, 12730,12728

Style:710B18632
CL BD PPC SPT
Washing: Softener wash

Special Instructions : SPI -18, Button stitch cross - 8X8.

Modified On:18th-Dec-2025

Modified By : John

FRONT

EMB pos frm shoulder seam to center of Logo

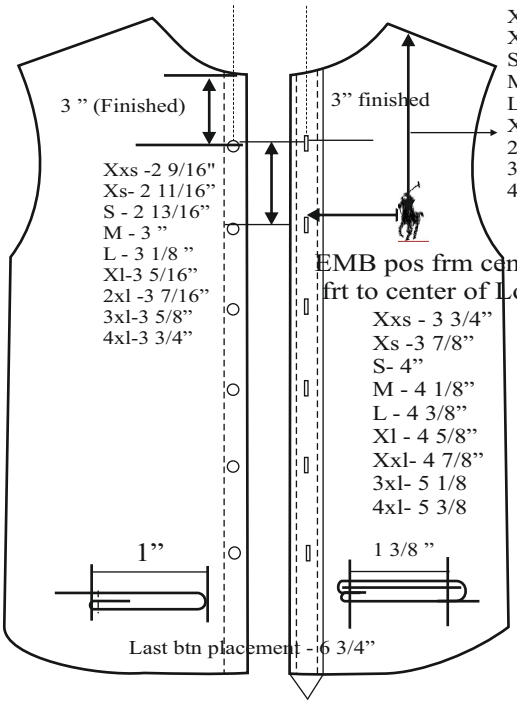

EMB Height 1 1/16'

(17L) buttons
6 Nos

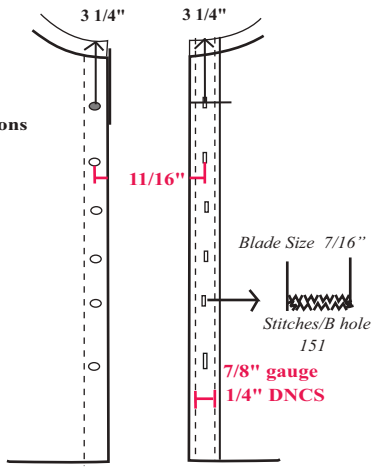

* Spare Buttons 17L,15L,13L
@ side seam

SPLIT YOKE

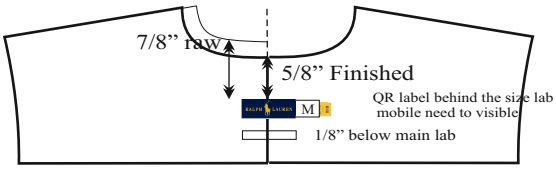

Main lab-4-side stitch

Secondary lab-
2-side stitch

CLASSIC FIT

QR label

Size lab

*Label attaching Needle size -7

*** When fabric is light color and label is dark color bobbin thread should be skala 360**

SPLIT BACK YOKE

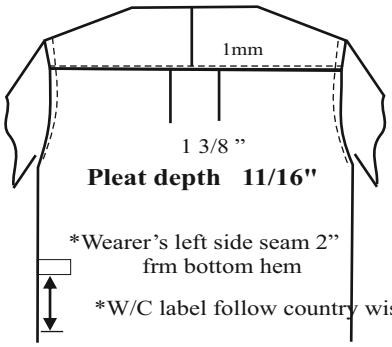

inner view

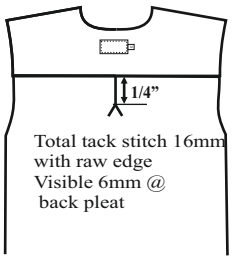

Interlining
Collar Skin- T60
Cuff - S64
Neck Band - P37
Front Placket- T88MS

Button(**)**
Front : 6, 17L
N Band : 1, 17L
Cuff : 1+1, 17L
Slv Plkt : 1+1, 15L
Spare : 1-17L, 1-15L,1- 13L @ Side seam
Collar points:1+1,13L

Thread details

Button shanking S/B 2mm

Buyer: PRL
Season : PF 26
Fit: Classic - New

Technical Sheet - Pre run

Order No: PRLS/25- 12731, 12730,12728

Style:710B18632
CL BD PPC SPT
Washing: Softener wash

Special Instructions : SPI -18, Button stitch cross - 8X8.

Modified On:18th-Dec-2025

Modified By : John

COLLAR

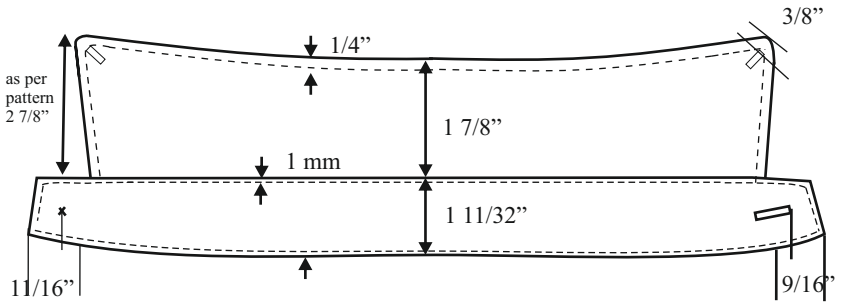

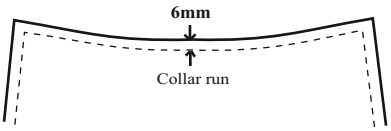

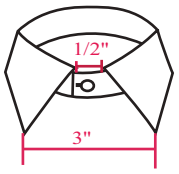

Btn Dwn Placement

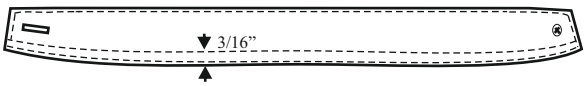

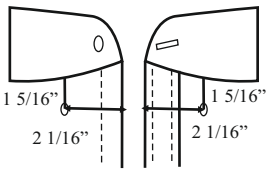

* Pick attach to be revers side top neck Band to be fused
***Self fab with Ft600lining required for btn down**

Btn Down B/H SPI-125
BD blade size - 5/16"
BD btn size - 13L

Blade Size 1/2”
Stitches/ B Hole 151

ASSEMBLY

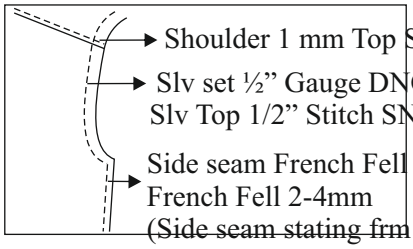

Shoulder 1 mm Top Stitch
Slv set ½” Gauge DNCS
Slv Top 1/2” Stitch SNLS
Side seam French Fell 1-5mm
French Fell 2-4mm
(Side seam stating frm slv side like jeager)
Left stitch on back right on frt

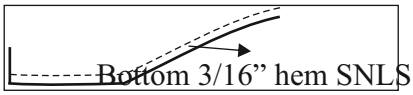

Bottom 3/16” hem SNLS

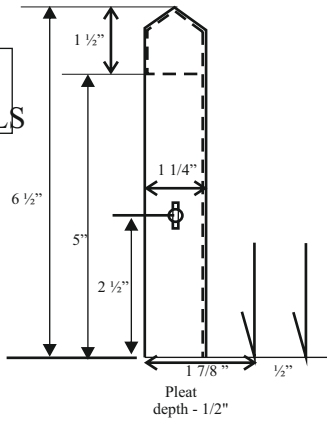

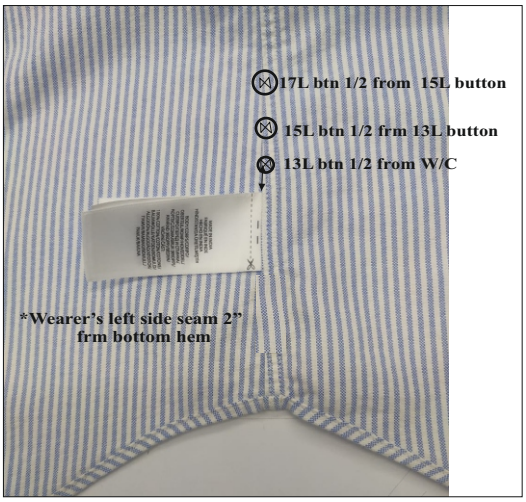

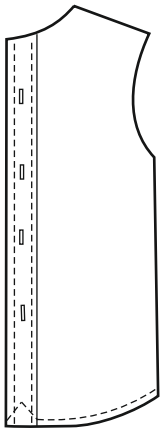

V Patch(11/16") @ front plkt

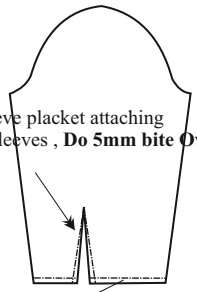

* Before Sleeve placket attaching both side Sleeves , **Do 5mm bite Over lock**

* Before cuff attaching both side Sleeves , **Do 8mm bite Over lock**

Interlining
Collar Skin- T60
Cuff - S64
Neck Band - P37
Front Placket- T88MS

Button(**)**
Front : 6, 17L
N Band : 1, 17L
Cuff : 1+1, 17L
Slv Plkt : 1+1, 15L
Spare : 1-17L, 1-15L,1- 13L @ Side seam
Collar points:1+1,13L

Thread details

Button shanking S/B 2mm